13 各部零件說明 Description

※每一款槍型基本配備不同依實際出貨為主。圖片僅供參考。
The components/accessories for each model may have kind of differences depending on the actual goods. Images are only for reference.

■ **ICS-91** Full Metal

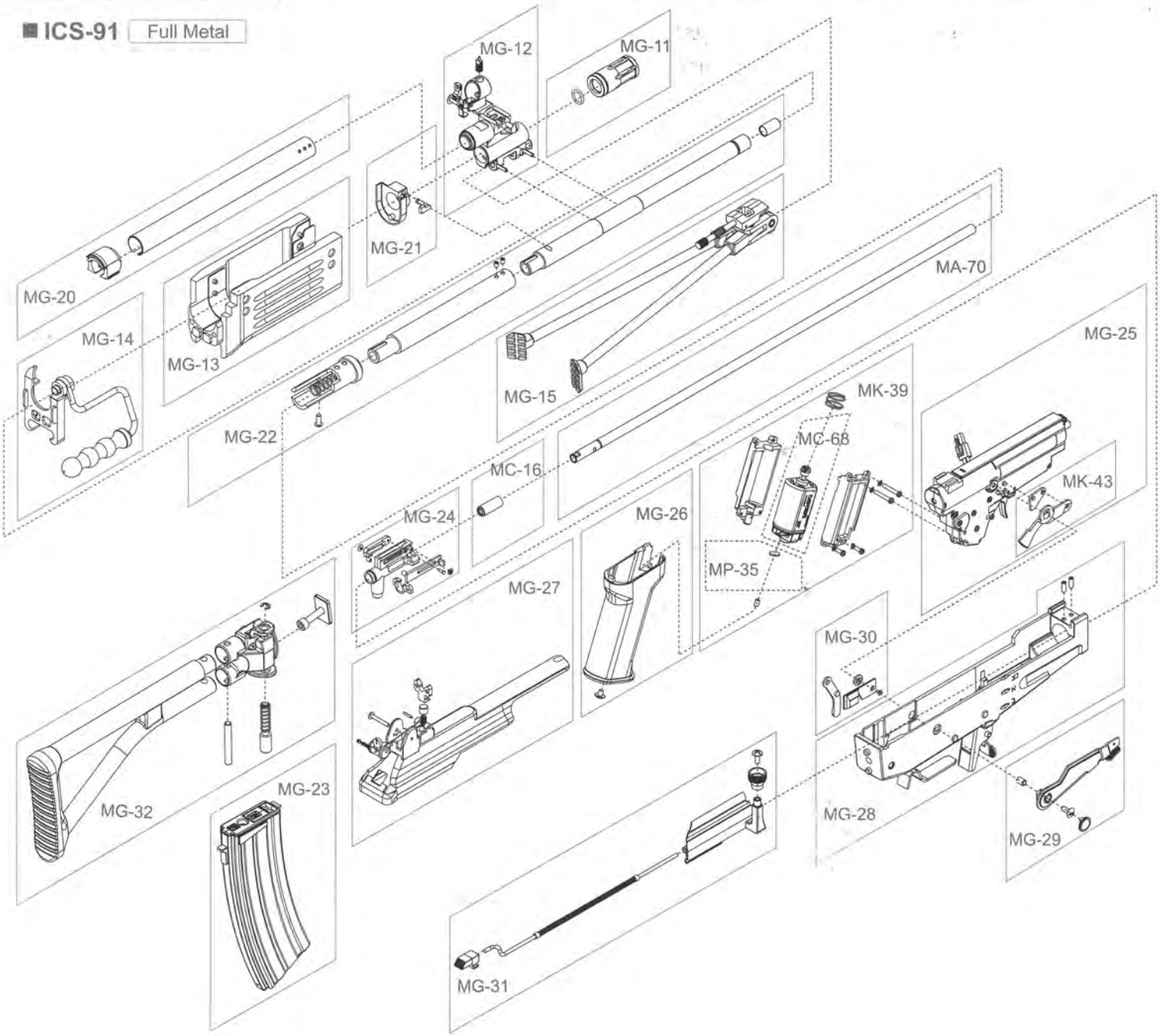

WARNING 警告 電槍使用之注意事項 Maintenance

1. 請勿使用回收及劣質的 BB 彈，以減少槍管損耗與避免卡彈的情形發生。
2. 如發現有卡彈的情形，應立即停止射擊，如卡彈後再勉強射擊，則會增加齒輪損耗。請使用內附通槍條，將卡彈清除後才可繼續使用。若完成通槍基本故障排除後仍無法使用時，請回原採購店家或專業經銷商尋求維修服務。
3. 使用前請先確定您的電池已充滿電，當使用中發覺電池即將用盡或射擊速度降低時，應立即更換電池。
4. 請定期使用通槍條清潔槍管，以保持槍支射擊時的準確性及減少卡彈的情形發生。
5. 請勿經常空槍射擊，以減少BOX及齒輪不必要的損耗。

使用前請務必詳閱此說明書限18歲以上使用
Always read through this manual before operation.
User restricted to 18 years of age or older.

1. Do not use recycle or low quality BB pellets to reduce the barrel damage and prevent from jams.
2. When a BB pellet is jammed, cease fire immediately. Firing under jam may cause damage on gears. Please use the cleaning rod that came with your airsoft gun to push it into the barrel by moving down gently until the jammed BB pellet comes out. If the jam still cannot be solved, please contact your original purchase retailer or ask for professional agent for repair service.
   Note: No need to remove the barrel when eliminating jam.
3. Please make sure the battery is fully charged before using. When the battery is run out or firing speed is decreasing, new battery has to be replaced immediately.
4. Please use cleaning rod periodically to clean the barrel to ensure the firing precision and reduce jam.
5. Do not dry fire the airsoft gun at any time to reduce damage to the gearbox.

WWW.ICSBB.COM

BE A GAME CHANGER ICS AIRSOFT